Wall Mounting Speaker

MAIN APPLICATIONS

- Ideal for foreground or background in:
  - Hotels
  - School
  - House of worship
  - Conference rooms
  - Restaurant and clubs



MAIN FEATURES

- 2-way system
- 3.5” low frequency woofer
- 0.5” high frequency tweeter
- 30W RMS recommended amplifier
- 100V line transformer (15/7.5/4/2W)
- Directional wall mount bracket included
- Connection via plug in «euroblock» connector
- White or black ABS enclosure

DESCRIPTION

The FBT 315WHT/BT two-way speaker unit is equipped with a 100V line transformer and provides the possibility of an 8 Ohm connection. An exclusive fully adjustable support bracket provides a flexible mounting system for virtually any application. The low-frequency section features a 3.5” woofer and the high-frequency section features a 0.5” tweeter. The power selector switch is installed on the rear of the enclosure. The loudspeaker system meets the following performance criteria: line transformer with power taps for 2/4/7.5/15W, frequency response from 100Hz to 15kHz (-10dB), nominal impedance of 8 Ohms, and pressure sensitivity of 85dB. The FBT 315WHT/BT is ideally suited for all applications requiring high-quality sound reproduction, such as foreground or background loudspeakers in restaurants and clubs, monitor speakers in churches, schools, conference rooms, and hotels.

TECHNICAL SPECIFICATIONS

GENERAL		
Code	Black	29350
	White	32372
Configuration	way	2
Low frequency woofer	inch	3.5
High frequency tweeter	inch	0.5

ACOUSTIC SPECIFICATIONS		
Frequency response (@-10dB)	Hz	100 - 15k
Sensitivity (@1W/1m)	dB	85
MAX SPL (cont/peak)	dB	100
Dispersion	H° x V°	120 x 120
Recommended HP filter	Hz - dB oct	70 - 24

INPUTS & OUTPUTS		
Input connectors		2-pin Euroblock

AMPLIFIER		
Recommended amplifier	W RMS	30
Long term power	W	15
Short term power (IEC 268-5)	W	60
Nominal impedance	Ohm	8
Transformer tap	W	15 / 7.5 / 4 / 2

MECHANICAL SPECIFICATIONS		
Operating / Storage temperature	°C	-25 to +55 / -40 to +70
Relative humidity		< 95%
Material	Cabinet	ABS
	Grille	Metal
Net dimensions (WxHxD)	mm	143 x 204 x 162
	inch	5.62 x 8.03 x 6.37
Net weight	kg	1.40
	lb	3.08

FBT ELETTRONICA S.p.A. strives to improve its products continuously and therefore reserves the right to make changes to the drawings and technical specifications at any time and without notice.

DIMENSIONAL DRAWING

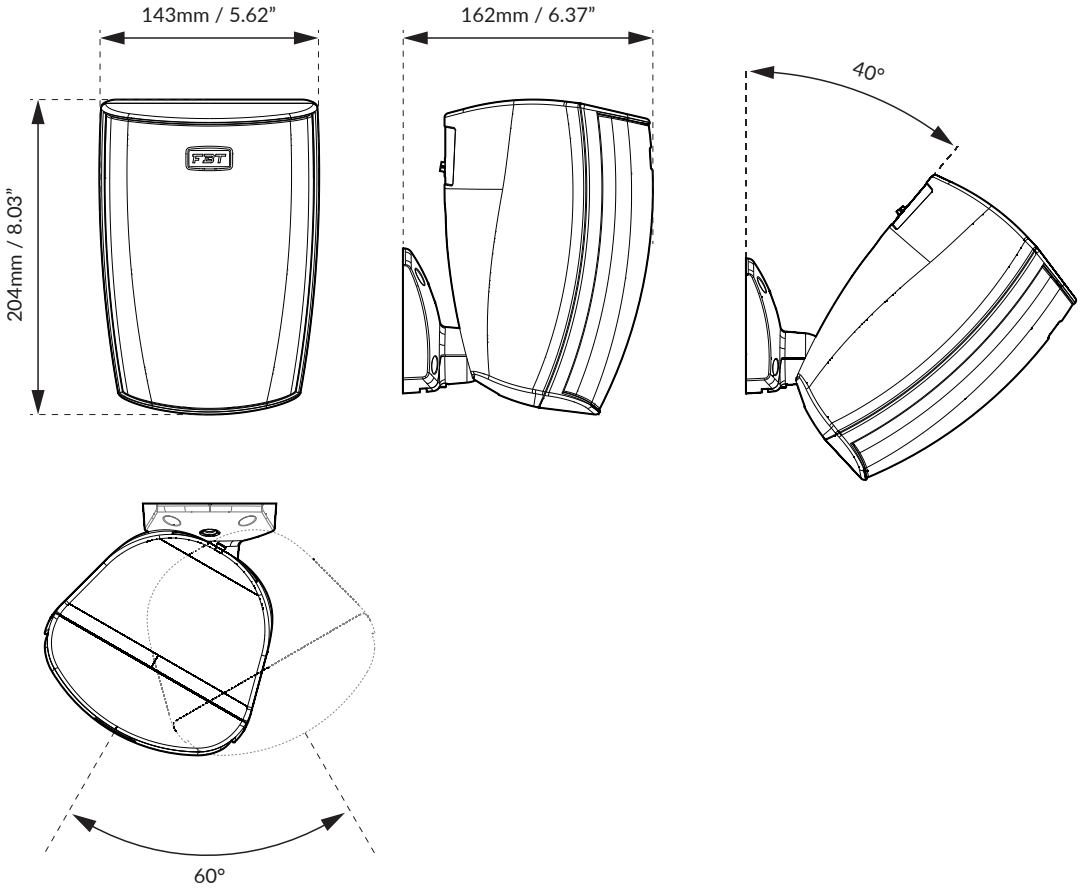

CONTROL PANEL

The speaker can be connected to audio lines at constant voltage (100V / 70V) or with constant impedance (8Ohm).

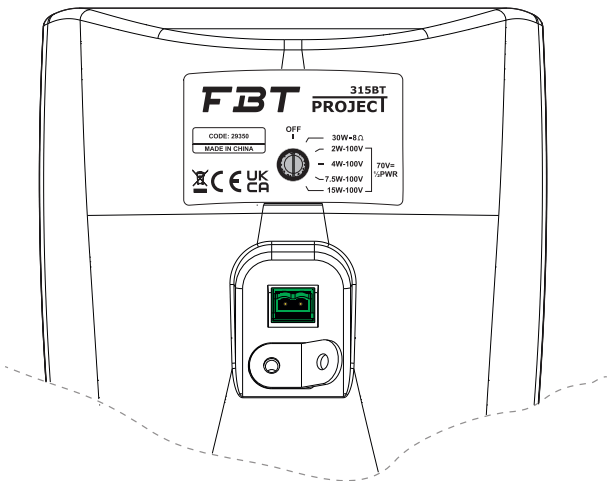

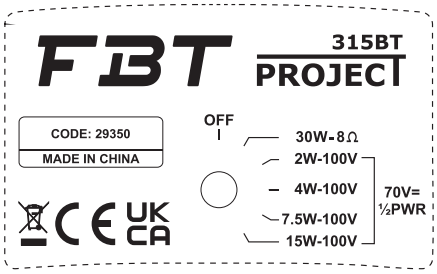

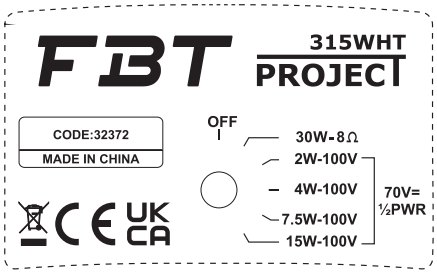

FBT ELETTRONICA S.p.A. strives to improve its products continuously and therefore reserves the right to make changes to the drawings and technical specifications at any time and without notice.

DIAGRAMS

Horizontal polar

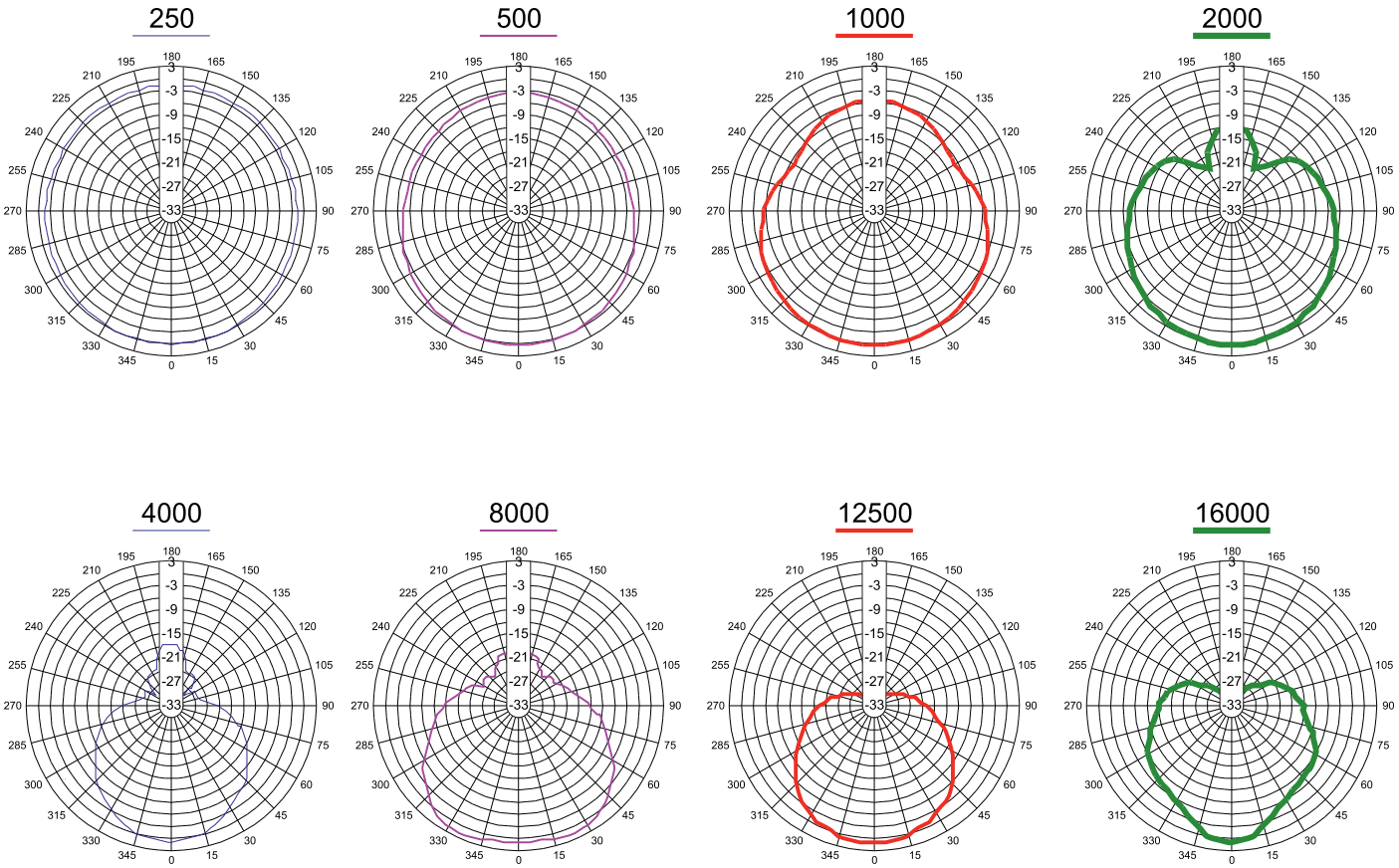

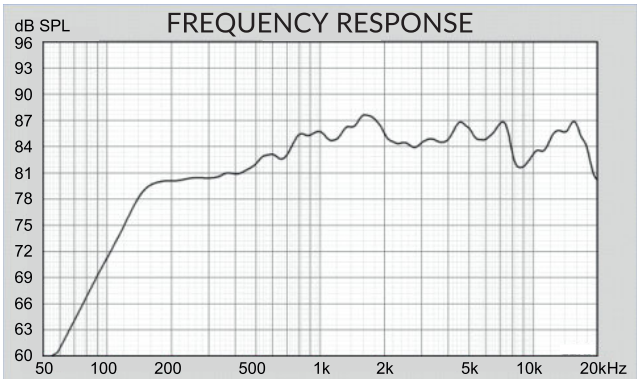

FBT ELETTRONICA S.p.A. strives to improve its products continuously and therefore reserves the right to make changes to the drawings and technical specifications at any time and without notice.
FBT ELETTRONICA SpA - Recanati (Italy) | www.fbt.it | info@fbt.it