DM86D / DM86E

2×10W / 4×10W Bluetooth Intelligent Music Amplifier with Knob Control & Display





Description

The DM86D (2×10W/8Ω) and DM86E(4×10W/8Ω) are Bluetooth intelligent music amplifiers with knob control and display, featuring a tempered glass panel, 4 touch buttons, a power switch, and a volume knob. They support Bluetooth streaming, AUX input, TF card and USB playback (up to 32G), with a customizable power-on welcome message. With smart audio control and exceptional playback quality, DM86D and DM86E are ideal for hotel, office and stylish commercial spaces, available in black, white, or gray type.

Features

- Tempered glass with hardware oxidation frame, 4 touch light source buttons, 1 power wave switch, 1 volume adjustment knob
- Boot welcome: Support power-on to play the hotel's designated welcome message/music. (Music files are placed on: TF card/USB drive flash - folder name (Please name: SYSTEM) -WELCOME (welcome words/songs).
- Bluetooth function: Support mobile phones and other external Bluetooth device pairing to achieve audio playback.
- AUX: Support external audio input to the machine, enlarge the output.
- Memory card function: external TF card, support USB disk (maximum support 32G)
- Sound function: Support ordinary, rock, classical, jazz, pop and other sound functions.
- Audio format: MP3, WAV, WMA, FLAC, APE, DTS, AAC, AC3, OGG and other audio formats are

The specifications will be subject to change without prior notice.
Copyright © Guangzhou DSPPA Audio Co., Ltd. All rights reserved.

supported.

- Power off memory function: memory of the state played before the last shutdown.
- Support power-on playback: Automatically play songs when powered on.
- Infrared remote control function: provide a variety of shortcut keys and humanized operation.

Specifications

Model	DM86D	DM86E
Output Power	2x10W/8Ω	4×10W/8Ω
Bluetooth Distance	≦10m	
Bluetooth Version	5.3	
Infrared Remote Control Distance	5-8m	
Audio Format	MP3, WAV, WMA, FLAC, APE, DTS, AAC, AC3, OGG	
Load	8 Ohm	
Audio SNR	≥98dB	
THD	0.03% (1W, 1KHz)	
Frequency Response	20Hz-20kHz	
Power Supply	AC220V (50 HZ) allows 110V-250V	
Product Size	86*86*10mm	
Cut-Out Size	78*78*57mm	
Net Weight	0.44kg	

Front / Rear Panel

DM86D Front / Rear Panel

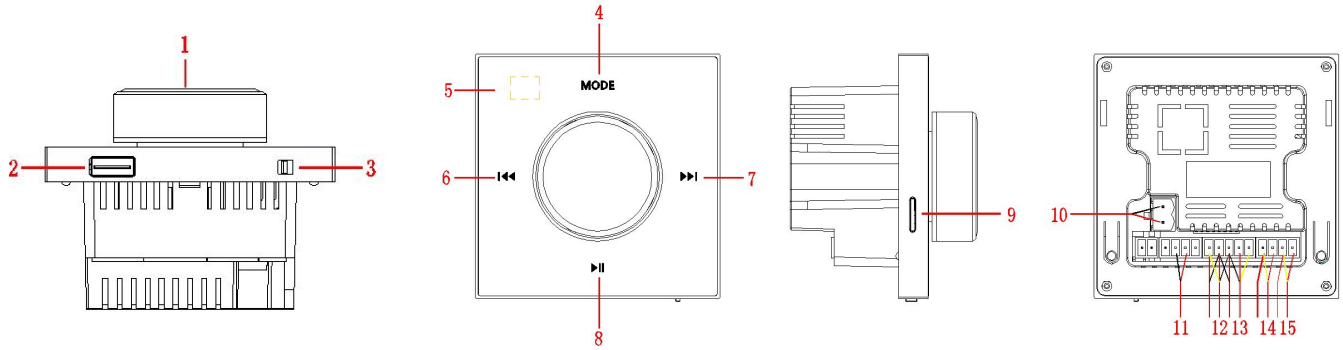

1. Knob: Adjust the volume by rotation (clockwise volume increases, counterclockwise volume decreases) The main interface can display the host playback mode, volume and song name.
2. USB interface: It can be connected to standard 1.1, 2.0 U disk, and supports a maximum capacity of 32G.
3. Power switch: Turn off power to the left and turn on power to the right.
4. Mode switch key: Press the key to switch the playback mode, support TF card mode, USB disk mode, AUX mode, Bluetooth mode.
5. Remote control infrared receiver.
6. Previous: Press this key to play the previous song.
7. Next: Press this key to play the next song.
8. Play/Pause: Press this key to play music, and then press this key to pause music.
9. TF card interface: The TF card interface is inserted to the right of the card holder, which can support a maximum capacity of 32G.
10. Power terminal: Connect the AC220V power supply.

The specifications will be subject to change without prior notice.
Copyright © Guangzhou DSPPA Audio Co., Ltd. All rights reserved.

11. Doorbell: Connect GND+DB to trigger the doorbell.
12. Audio input cable: audio cable (three-core shielded cable: commonly known as microphone cable), RVVP2×0.5, RVVP2×0.75, connected to AUX L+AUX R+GND.
13. Audio output: audio cable (three-core shielded cable: commonly known as microphone cable), RVVP2×0.5, RVVP2×0.75, connected to OUT L +OUT R+GND.
14. Speaker: speaker wire (200 core), RVH2×100, RVH2×200 connected to SPK L-SPK L+.
15. Speaker: speaker wire (200 cores), RVH2×100, RVH2×200 connected to SPK R-SPK R+.

DM86E Front / Rear Panel

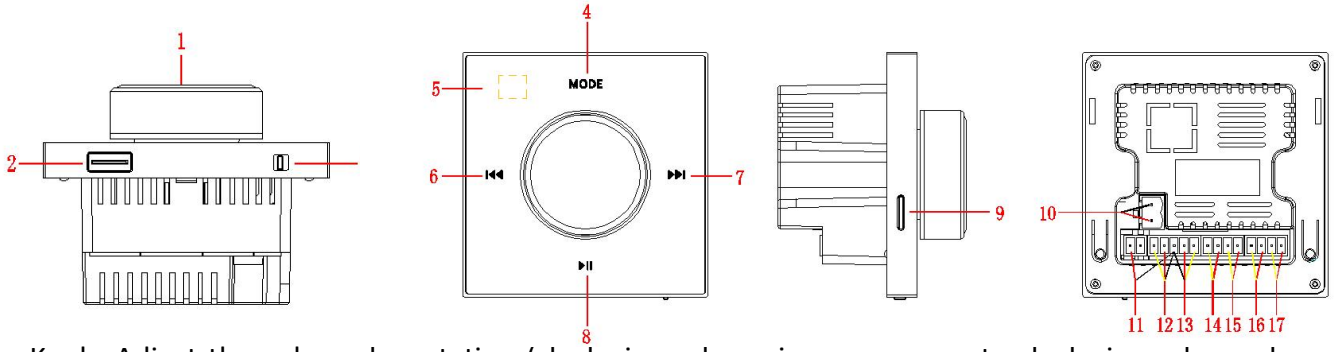

1. Knob: Adjust the volume by rotation (clockwise volume increases, counterclockwise volume decreases) The main interface can display the host playback mode, volume and song name.
2. USB interface: It can be connected to standard 1.1, 2.0 USB disk, and supports a maximum capacity of 32G.
3. Power switch: Turn off power to the left and turn on power to the right.
4. Mode switch key: Press the key to switch the playback mode, support TF card mode, USB disk mode, AUX mode, Bluetooth mode.
5. Remote control infrared receiver.
6. Previous: Press this key to play the previous song.
7. Next: Press this key to play the next song.
8. Play/Pause: Press this key to play music, and then press this key to pause music.
9. TF card interface: The TF card interface is inserted to the right of the card holder, which can support a maximum capacity of 32G.
10. Power terminal: Connect the AC220V power supply.
11. Doorbell: Connect GND+DB to trigger the doorbell.
12. Audio output: audio cable (three-core shielded cable: commonly known as microphone cable), RVVP2×0.5, RVVP2×0.75, connected to OUT L +OUT R+GND.
13. Audio input cable: audio cable (three-core shielded cable: commonly known as microphone cable), RVVP2×0.5, RVVP2×0.75, connected to AUX L+AUX R+GND.
14. Speaker: Horn wire (200 core), RVH2×100, RVH2×200 connected to SPK L-SPK L+.
15. Speaker: speaker wire (200 cores), RVH2×100, RVH2×200 connected to SPK R-SPK R+.
16. Speaker: speaker wire (200 core), RVH2×100, RVH2×200 connected to SPK L-SPK L+.
17. Speaker: speaker wire (200 cores), RVH2×100, RVH2×200 connected to SPK R-SPK R+.

The specifications will be subject to change without prior notice.
Copyright © Guangzhou DSPPA Audio Co., Ltd. All rights reserved.

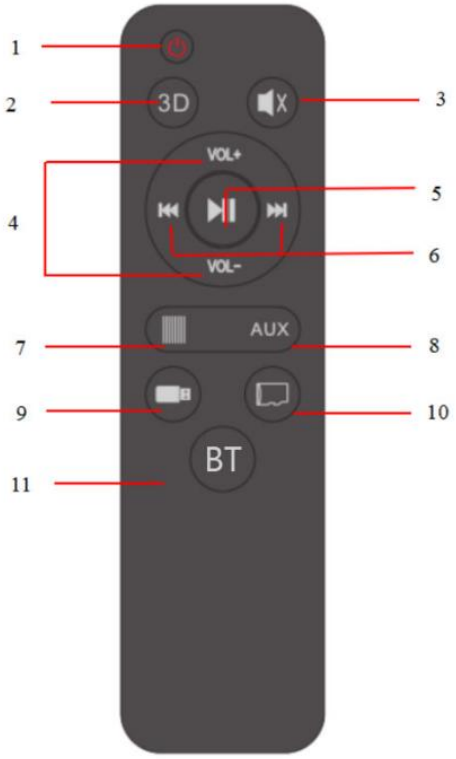

1. On key: Press the key to power on, press the key again to power off.
2. 3D key: Press this key to switch 3D sound effects.
3. Mute key: Press this key to turn off the sound, and then press to turn on
4. Volume control key: Press this key to control the volume increase or decrease, long press to quickly adjust
5. Play/Pause: Press this key to play/pause music.
6. Previous/Next song key: Press this key to play the previous or next song.
7. Sound key: Press this key to change the sound.
8. AUX Play: Press this key to switch to AUX play mode.
9. USB Play: Press the key to play and switch to USB Disk mode to play.
10. TF card playback: Press this key to switch to T card playback mode.
11. Bluetooth Playback: Press this key to switch to Bluetooth playback mode.

The specifications will be subject to change without prior notice.
Copyright © Guangzhou DSPPA Audio Co., Ltd. All rights reserved.