100 ICW6-T

Product Data Sheet

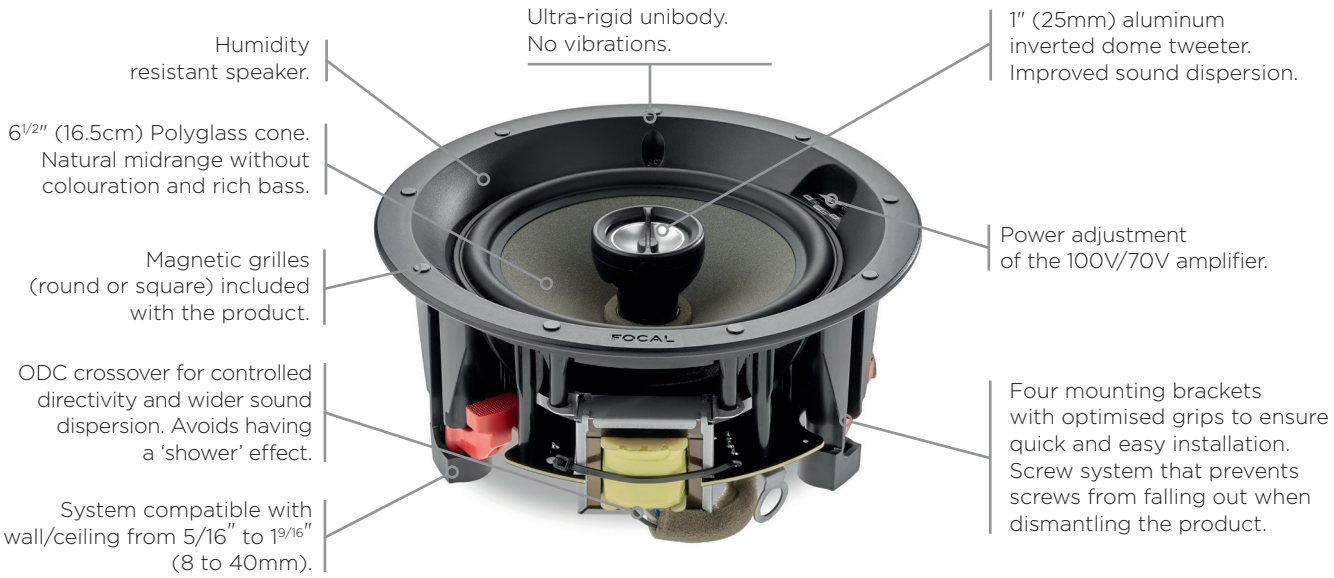



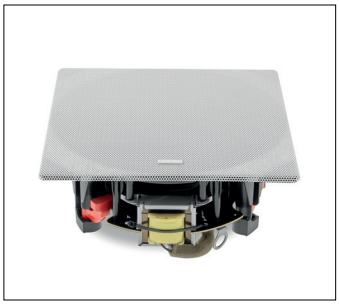



Key Points

- Product designed and developed in France by Focal
- Compact product with shallow mounting depth
- 100V/70V mode by switch
- Ready-to-paint grille

Technical Specifications

Type	**In-wall/In-celling - 2-way coaxial for 100V/70V line installation**
Drivers	6½" (16.5cm) Polyglass Midbass 1" (25mm) Aluminium inverted dome Tweeter
Sensitivity (2.83V/1m)	89dB
Frequency response (+/-3dB)	62Hz - 23kHz
Low frequency point (-6dB)	50Hz
Power in 70V	4/7.5/15W
Power in 100V	8/15/30W
External dimensions (Ø/Depth)	8 3/16 x3 3/4" (208x95mm)
Cut-Out diameter	7¼" (184mm)
Depth from wall	3 5/8" (91mm)
Net weight (with front grille)	3.75lbs (1.7kg)
Packing dimensions (WxDxH)	8¼x8¼x6 11/16" (270x270x170mm)
Total weight (with packaging)	6.61lbs (3kg)

Selectable power table

70V	4W	7.5W	15W
100V	8W	15W	30W

Dimensions (mm)

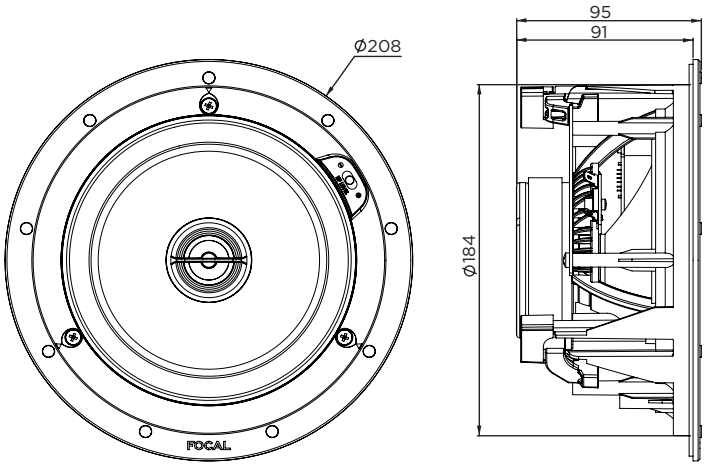

Measurements Directivity

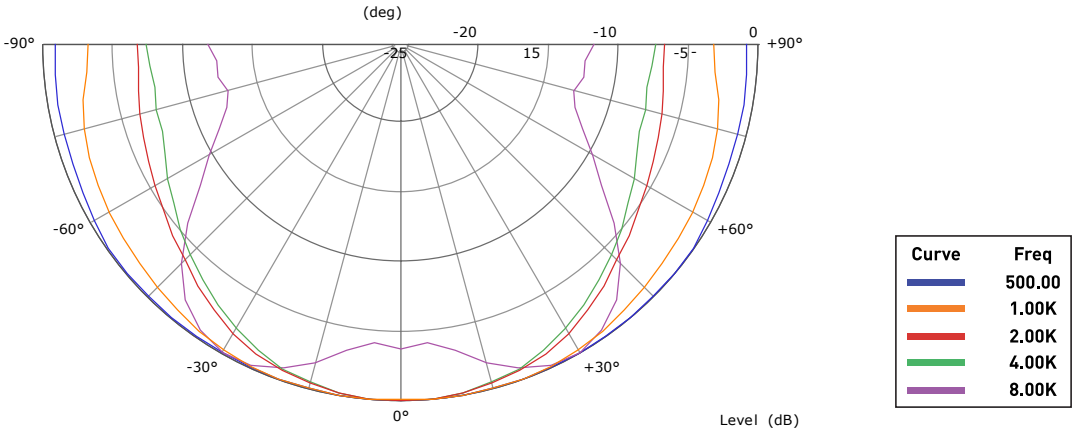

Frequency Response

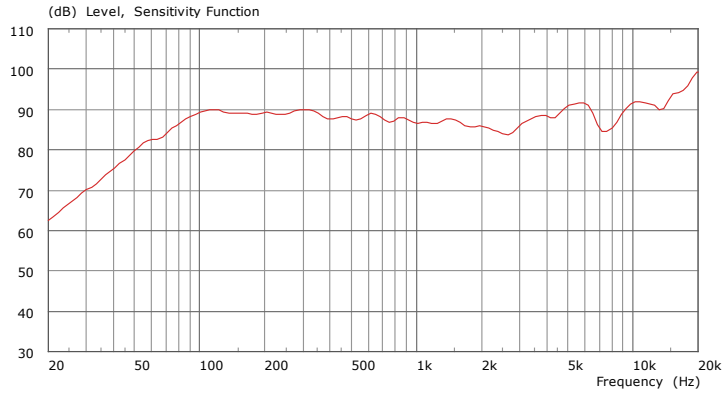

100 ICW6-T Speaker level Calculation Table

Power/Distance	1m	2m	5m
1W (2.83V)	89dB	83dB	75dB
5W (8.94V)	96dB	90dB	82dB
10W (12.6V)	99dB	93dB	85dB
20W (15.5V)	102dB	96dB	88dB

Summary	125Hz	250Hz	500Hz	1kHz	2kHz	4kHz	8 kHz
SPL (2.83V/1m) (dB)	90	89	89	88	87	89	87
Opening angle at -6dB	180°	180°	180°	180°	140°	120°	100°